

EUROPEAN SOUTHERN OBSERVATORY

Organisation Européenne pour des Recherches Astronomiques dans l'Hémisphère Austral
Europäische Organisation für astronomische Forschung in der südlichen Hemisphäre

# LA SILLA-PARANAL OBSERVATORY

## HARPS HIGH EFFICIENCY FIBRE HEAD OPTO-MECHANICAL DESIGN

Doc. No.: 3P6-DSD-ESO-754-0001

Issue: 1.0

Date: 26 – April - 2005


Prepared: W. Eckert A. Gilliotte
G. Avila J. Alonso

Name Date Signature

Approved:

Name Date Signature

Released:

Name Date Signature

## CHANGE RECORD

| Revision | Date | Section/Paragraph | Remarks |
|---|---|---|---|
| Issue 1.0 | 26/04/2005 | All | First Issue |
| | | | |

## INDEX OF CONTENTS

**1. INTRODUCTION ..... 5**

1.1. PURPOSE AND SCOPE ..... 5
1.2. REFERENCE DOCUMENTS ..... 6
1.3. APPLICABLE DOCUMENTS ..... 6
1.4. ACRONYMS & ABBREVIATIONS ..... 6

**2. HIGH EFFICIENCY FIBRE HEAD ..... 7**

2.1. OVERVIEW ..... 7
2.2. FIBRE HEAD TOLERANCE SPECIFICATION ..... 8
2.3. REALIZING THE SPECIFIED FIBRE HEAD TOLERANCES ..... 9

**3. MECHANICAL DESIGN OF THE FIBRE HEAD ..... 11**

3.1. OVERVIEW ..... 11
3.2. DESIGN UPGRADES COMPARED TO PDR ..... 11
3.3. FIBRE HEAD MAIN BLOCK ..... 12
3.4. SHUTTER BLADE ..... 13
3.5. APERTURE-MIRROR NICKEL PLATE ..... 13
3.6. SHUTTER DRIVE ..... 14
3.7. FERRULE AND ROD LENS ..... 15
3.8. FIBRE HEAD ASSEMBLY ..... 15

**4. MACHINING CONSIDERATIONS ..... 17**

4.1. OVERVIEW ..... 17
4.2. MACHINING PRECISION ..... 17
4.3. HEAD MACHINING EXERCISE ..... 17

**5. FIBRE SPLICING ..... 21**

5.1. OVERVIEW ..... 21
5.2. TOOL ..... 21
5.3. PROCEDURE ..... 22

**6. FIBRE HEAD ALIGNMENT ..... 22**

6.1. OVERVIEW ..... 22
6.2. TOOL #1 ..... 22
6.3. TOOL #2 ..... 23
6.4. ALIGNMENT PROCEDURE USING TOOL #1 ..... 24
6.5. ALIGNMENT PROCEDURE USING TOOL #2 ..... 25

**7. ROD LENS DESIGN ..... 25**

**INDEX OF FIGURES AND TABLES**

FIGURE 1 : HEF HEAD SIMPLIFIED MECHANICAL DRAWING ..... 7
FIGURE 2: SHUTTER BLADE INSIDE THE HEAD ..... 11
FIGURE 3: MAIN BLOCK ..... 12
FIGURE 4 : SHUTTER BLADE ..... 13
FIGURE 5 : SHUTTER DRIVE ..... 14
FIGURE 6 : FERRULE AND ROD LENS ..... 15
FIGURE 7 : FIBRE HEAD ASSEMBLY ..... 16
FIGURE 8: ALUMINIUM BLOCK WITH THE "CUP" REMOVED ..... 17
FIGURE 9: MAIN BLOCK WITH THE NICKEL PLATE IN PLACE ..... 18
FIGURE 10: CLOSED BLOCK READY FOR MACHINING ..... 18
FIGURE 11: DRILLING OF THE APERTURE HOLES ..... 19
FIGURE 12 : FIBRE SPLICING TOOL ..... 21
FIGURE 13 : TOOL #1 ..... 23
FIGURE 14 : TOOL #2 ..... 24
FIGURE 15: ZEMAX OPTICAL DESIGN OF THE EGGS ROD LENS ..... 26
FIGURE 16: SPOT DIAGRAM ON THE IMAGE FOCAL PLANE OF THE ROD LENS. ..... 27

# 1. INTRODUCTION

The High Accuracy Radial-velocity Planetary Searcher (HARPS) is designed for precise Radial Velocity (RV) measurements. Unfortunately the required extreme stability is achieved, among other factors, at expenses of the instrument's optical efficiency.

Because the RV precision depends not only on the number of photons but also on the spectral resolution, the projected diameter of the fibre on the sky is only 1 arcsec, yielding a spectral resolution of 110000. An image scrambler for the stabilization of the input beam is also needed; the image scrambler alone is responsible for a 25% loss in efficiency.

The shutter in the standard HARPS mode (HAM: High Accuracy Mode) is located just upstream of the scrambler, outside of the vacuum vessel. This is not an option for the High Efficiency Mode (HEM, see [AP1]).

High Efficiency Fibres (HEF) with larger field of view (1.4 arcsec) and without scrambler are installed in parallel to the standard fibres within the spectrograph, but have not been connected to the fibre adapter. The responsibility of installing the fibre in their metallic jacket, manufacture a shutter and a fibre head was left to ESO.

The main challenge is to develop a fibre head integrating a shutter and taking into consideration a micro-lens design for the fibre input. Other design tasks involve the shutter control hardware and the modification of the ICS/OS/templates, and the data reduction SW. Please refer to [AP1] "High Efficiency Mode Upgrade: Users Requirement and Implementation Plan".

The 3P6 HARPS Cassegrain Fibre Adapter (HCFA) incorporates a fibre head carriage for two units, actually two heads are installed; one for the High Accuracy Mode (HAM) of the HARPS Spectrograph and the other for the Coude Echelle Spectrograph (CES).
According to the requirements [AP1] the new HARPS High Efficiency Mode (HEM) head will be installed in the CES head place and it will be changed whenever the CES is needed, thus not requiring to dismount the HAM head.

## *1.1. Purpose and Scope*

This document presents the opto-mechanical design for the HEF head together with, the fibre splicing technique and alignment plan for the optical system.

Starting with the required mechanical tolerances it explains the design by referencing the mechanical drawings and additionally it describes the newly designed tools for

assembling and aligning both the fibre termination-rod lens assembly or ferrule and the ferrule into the head itself.

### *1.2. Reference Documents*

[RE1] "Miniature Drive Systems" Faulhaber 2001-2002
[RE2] "Baumer Electric" Catalogue.

### *1.3. Applicable Documents*

[AP1] "High Efficiency Mode Upgrade: Users Requirements and Implementation Plan" 3M6-SPE-ESO-13100-0012 Issue 1.3 March 5, 2004. G. Lo Curto, L. Pasquini, G. Rupprecht.
[AP2] "High Efficiency Fibre Head for HARPS" 3P6-TRE-ESO-70200-0001 Issue 1.0 July 12, 2004. W. Eckert, G. Avila, J. Alonso.
[AP3] "Fibre Splicing Test" INS-04/17 October 5, 2004 G. Avila.
[AP4] "HARPS High Efficiency Fibre Shutter Electronics" 3P6-DSD-ESO-60400-0002 Issue 1.0 December 24, 2004 J. Alonso.
[AP5] "HARPS High Efficiency Mode Software Design Description" 3P6-SDS-ESO-80030-0005 Issue 1.3 March 14, 2005 Tzu-Chiang Shen.

### *1.4. Acronyms & Abbreviations*

| | |
|---|---|
| EGGS | Extra Good General Spectroscopy |
| HARPS | High Accuracy Radial-velocity Planetary Search |
| FEROS | Fibre-fed Extended Range Optical Spectrograph |
| CES | Coude Echelle Spectrograph |
| RV | Radial Velocity |
| HAM | High Accuracy Mode |
| HEM | High Efficiency Mode |
| HEF | High Efficiency Fibre |
| HEFS | High Efficiency Fibre Shutter |
| HCFA | HARPS Cassegrain Fibre Adapter |
| DC | Direct Current |
| LED | Light Emitting Diode |
| LCU | Local Control Unit |
| TBD | To Be Defined |
| TBM | To Be Measured |

# 2. HIGH EFFICIENCY FIBRE HEAD

## *2.1. Overview*

The HEF head incorporates four main functionalities:

1. Aperture plate with two 200µm aperture holes spaced at 16mm.
2. Shutter mechanism for closing the aperture holes.
3. Stable holding of the fibre terminations with glued rod lenses.
4. Reflection of a star image on the guide camera for guiding.

The shutter mechanism uses a small Direct Current (DC) electric motor driving a bi-stable mechanism loaded with a spring. The rotation of the motor axis is confined to 32 degrees by suitable mechanical stops and directly drives a small shutter blade located in between the rod-lens and the aperture plate. Please refer to Figure 1 below for a simplified outlook of the system. Please refer to [AP1] Chapter 5 “Description of the upgrade” point 5.
The “reflective aperture plate” is alternatively called “Nickel plate” trough out the text and drawings.

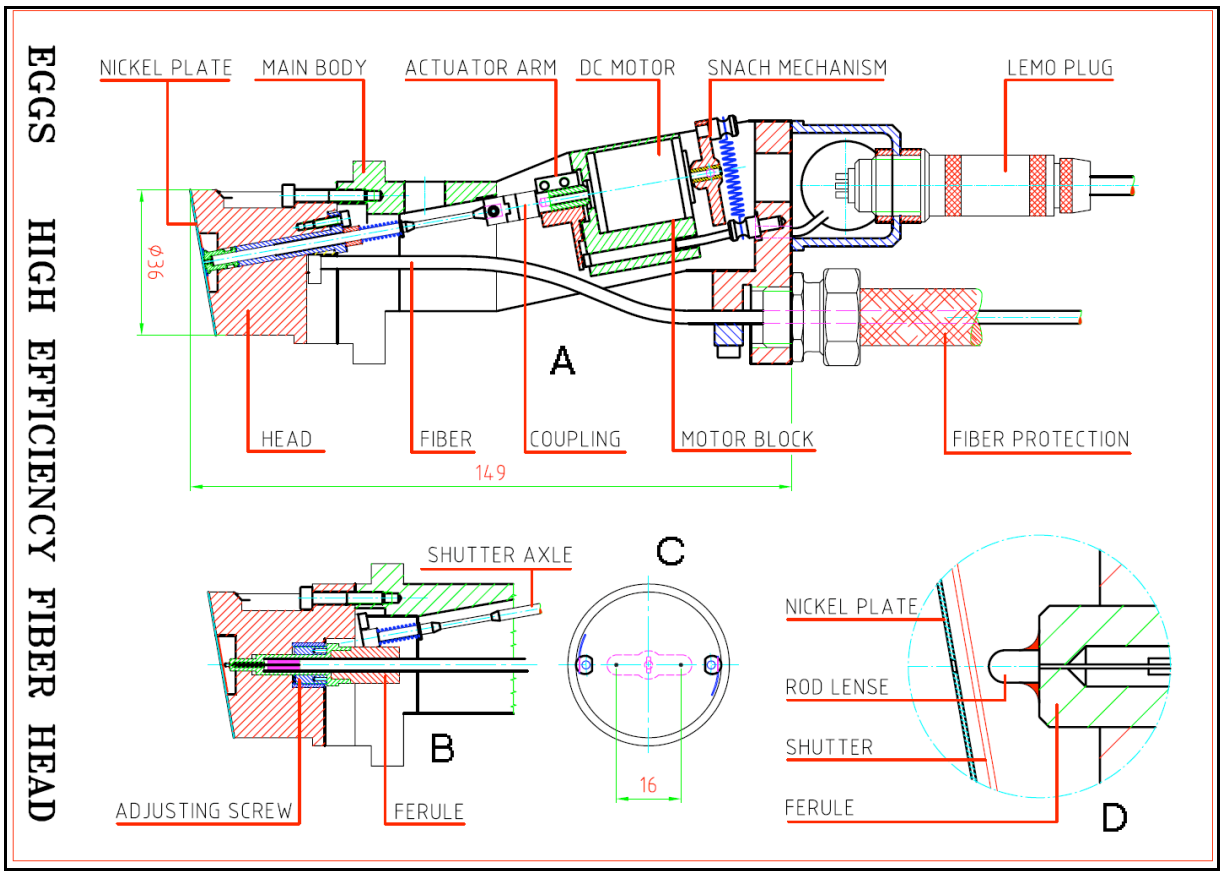


**Figure 1 : HEF Head Simplified Mechanical Drawing**

### *2.2. Fibre Head Tolerance Specification*

- Position tolerance:
  - *Fibre – rod lens decentring for 5% losses.*

    The fibre core diameter is 100 µm and the telescope pupil on the focal plane of the lens is 95.2µm (770/8.09).
    Taking chromatic aberrations into account and making the convolution between two circles of 100 and 95.2µm, a flux reduction of 5% is due to a decentring of 10µm at wavelength of 400nm, 12µm at 550nm and 11.1µm at 600nm.
    *We specify a maximum decentring of 5µm.*

  - *Lens – aperture hole decentring for 5% losses.*

    We will use the approximation of bad seeing or evenly illuminated aperture hole. In this case we only have to consider the convolution between the aperture hole and the fibre image.
    A good approximation in optical fibres is to assume that its pupil is located at infinity, therefore, when coupled on a lens the image of the pupil will be at the object focal plane of the rod lens. For a flux reduction of 5% we compute that the decentring has to be 20µm.
    *We specify a maximum decentring of 10µm.*

- Angular tolerance:
  - *Rod lens axis – fibre axis misalignment.*

    By experience we know that this misalignment could be quite large. Ideally it should be less than 1 degree. (This tolerance affects the field aberrations only)
    *We specify a maximum misalignment of 0.5 degree.*

  - *Fibre/rod lens/aperture hole axis – telescope pupil axis misalignment.*

    For FEROS the misalignment has been estimated to be 0.5 degree. This value gives a vignetting for the projection of the pupil on the fibre of less than 2%.
    *We specify a maximum misalignment of 0.25 degree.*

### *2.3. Realizing the Specified Fibre Head Tolerances*

- Position Tolerance:

  - ✓ *Fibre – rod lens decentring 5µm.*

  The centring and holding of the rod lens while the optical cement cures will be done using a specially built tool named Tool #1.
  Tool #1 X Y movement is based on a stacked pair of mini linear stages driven by micro-meter screws. These stages have a measured positioning repeatability and resolution better than 2µm. Considering the few parts and simplicity of Tool #1 and provided that the adjusting and curing process is done in a controlled temperature environment we can safely glue the rod lens within 2µm concentricity.

  - ✓ *Lens – aperture hole decentring 10µm.*

  The machining technique warranties a decentring of the aperture plate hole and the ferrule hole of less than 5µm. The plate mounting and dismounting positioning accuracy will be 2µm. We can safely say 6µm maximum decentring.
  However the ferrule mates the head's hole with +/-250µm X Y adjusting range and the final centring is done immediately after gluing the ferrule in place. Thus the above 6µm tolerance is in fact only the offset of the adjusting range and does not impact on the required centring accuracy.
  The final result will depend on the performance of a specially built tool named Tool #2. This tool centres and holds the ferrule in place while the glue cures. The stability, positioning repeatability and positioning resolution of Tool #2 will define the final result.
  Provided that we observe a few precautions in the manufacturing of Tool #2 we are confident that we can glue the ferrule inside the head within 8µm.

- Angular Tolerance:

  - ✓ *Rod lens axis – fibre axis misalignment 0.5degree.*

  This tolerance is mainly determined by how perpendicular is the rod lens optical axis with respect to the rod lens seating plane. The exact specified tolerance is hidden somewhere and not available for the moment, we only know that is <<1degree.

We do have two possibilities:

I. To glue the rod lens directly as it is. This will result in a tolerance <<1degree.

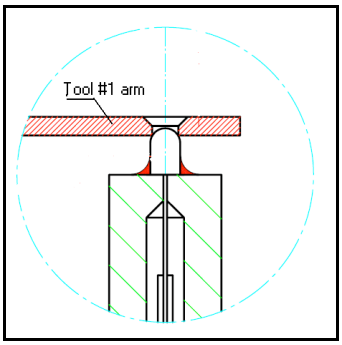


II. Machine a bushing for precisely fitting and gluing the rod lens inside. Once ready follow the normal procedure with Tool #1. This will result in a tolerance <1arcmin.

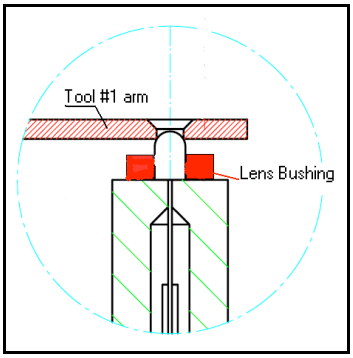


✓ *Fibre/rod lens/aperture hole axis – telescope pupil axis 0.25degree.*

Because the mounting of the head over the HARPS adapter carriage has no adjustments, in fact the head is pinned and bolted in position. We can only say that the tolerance will be approximately the actual HAM head misalignment plus 1arcmin in the worst case (this 1arcmin corresponds to our worst case machining errors for the head).

# 3. MECHANICAL DESIGN OF THE FIBRE HEAD

## *3.1. Overview*

The mechanical design of the fibre head is based on a solid aluminium block for rigid and stable support of two fibre terminations or ferrules in front of two aperture holes. It incorporates adjusting means for both; centring the rod lens/ferrule in front of the aperture hole (X Y adjustment) and adjusting the nominal 770µm distance between the rod lens and the plate (Z adjustment). These adjustments are performed during the assembling/gluing of the head by the aid of a specifically designed supporting tool. The adjusting ranges are; +/-250µm for the X Y and +/-300µm for the Z.

The main difference between, let's say more "conventional" fibre heads like the FEROS one, and the new HEF head is the requirement of a shutter mechanism inside the head. Our head shall be ideally at least as stable as the HARPS HAM head and any effort should be done to minimize efficiency losses. Any relative movement of the two fibers+lens systems which would introduce an artificial RV drift has to be avoided.

The shutter itself is a rotary blade located in the 770µm gap between the fibre termination's rod lenses and the aperture plate, Figure 2 below.

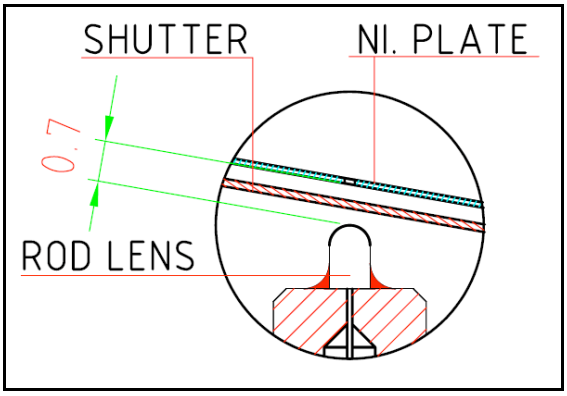


**Figure 2: Shutter blade inside the head**

## *3.2. Design Upgrades Compared to PDR*

We identified four major limitations in the original design:

1. Once assembling the head, the shutter mechanism was not accessible any more. Please refer to [AP1] 5.1.2 Design, installation and operation, Accessibility.
2. The reflective surface was not made of a single piece but in two pieces, a small Nickel plate with the aperture holes glued in a recess in front of the shutter cavity. Apart from having a reflecting surface with zones made of two materials,

Aluminium and Nickel, it was very difficult to centre the aperture holes on the optical fiber (lens) beam.
3. Not possible to drill the aperture holes trough the Nickel plate with the desirable 10 degree angle. The plate's holes were machined by an external company.
4. Too many machining steps both in house and by external companies rendering to the accumulation of errors.

The upgraded design efficiently overcomes these limitations:

1. Now we use a single piece reflective plate precisely constrained over the head's front plane by two steel pins and gently pressed over the seating surface by two spring levers. This scheme allows us to mount and dismount the plate with a positioning repeatability of 2µm, the tolerance allowed to the steel pins for "easy" insertion and removal.
2. The reflective surface is done of a single piece. As explained above the centring is not an issue any more.
3. The new machining procedure, cleanly and precisely, produces the required angled holes trough the plate.
4. All the sequence of in-house and external critical machining steps was reduced to a single in-house operation.

### *3.3. Fibre Head Main Block*

Main block refers to an aluminium cylinder and mating cup for starting the head construction. The cup allows the constraining on position of the Nickel plate while machining the holes for the plate's retaining pins and the apertures themselves. After these machining steps the cup is discarded and the diameter of the main block is reduced eliminating the peripheral pin holes and threaded holes used for retaining the cup, see Figure 3 below.

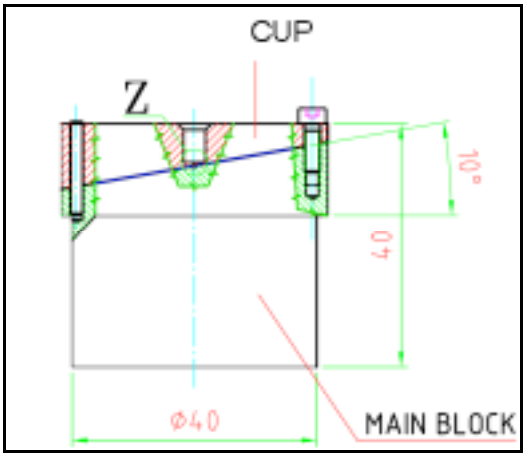


**Figure 3: Main Block**

Please refer to 4 MACHINING CONSIDERATIONS for the complete idea behind the main block.

### 3.4. Shutter blade

The shutter blade is cut by an external company (LABELCOMAT) from 150µm thickness hard, flat, cooper foil. The entire piece is mate blackened acetone resistant.

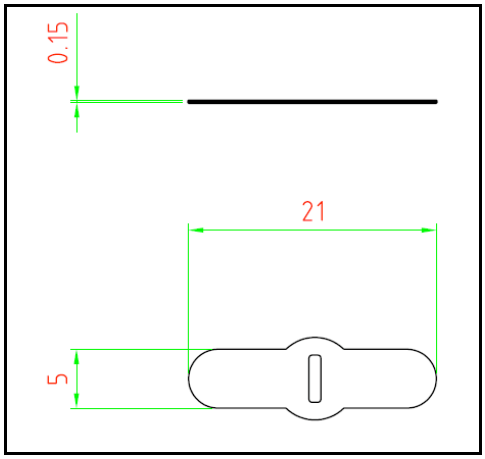


**Figure 4 : Shutter Blade**

### 3.5. Aperture-Mirror Nickel Plate.

The plate is cut by an external company (LABELCOMAT) from a100µm thickness Nickel foil. The plate surface is flat. One face of the plate is polished to mirror quality and the other is mate blackened. The plate is round, 36mm diameter.

### *3.6. Shutter Drive*

The shutter mechanism uses a small Direct Current (DC) electric motor driving a bi-stable spring loaded mechanism. Either for opening or closing the motor is energized for 20ms with the appropriate polarity. The maximum output power capacity of the motor is 1.5W at 73% efficiency thus producing a maximum heat dissipation of 400mW for 20ms when opening or closing the shutter. Zero power dissipation while open or closed, please refer to [AP1] 5.1.2 Heat dissipation.
Two inductive proximity switches sense the open and close states of the shutter.
For a complete overview of the shutter drive design please refer to Figure 5 below.

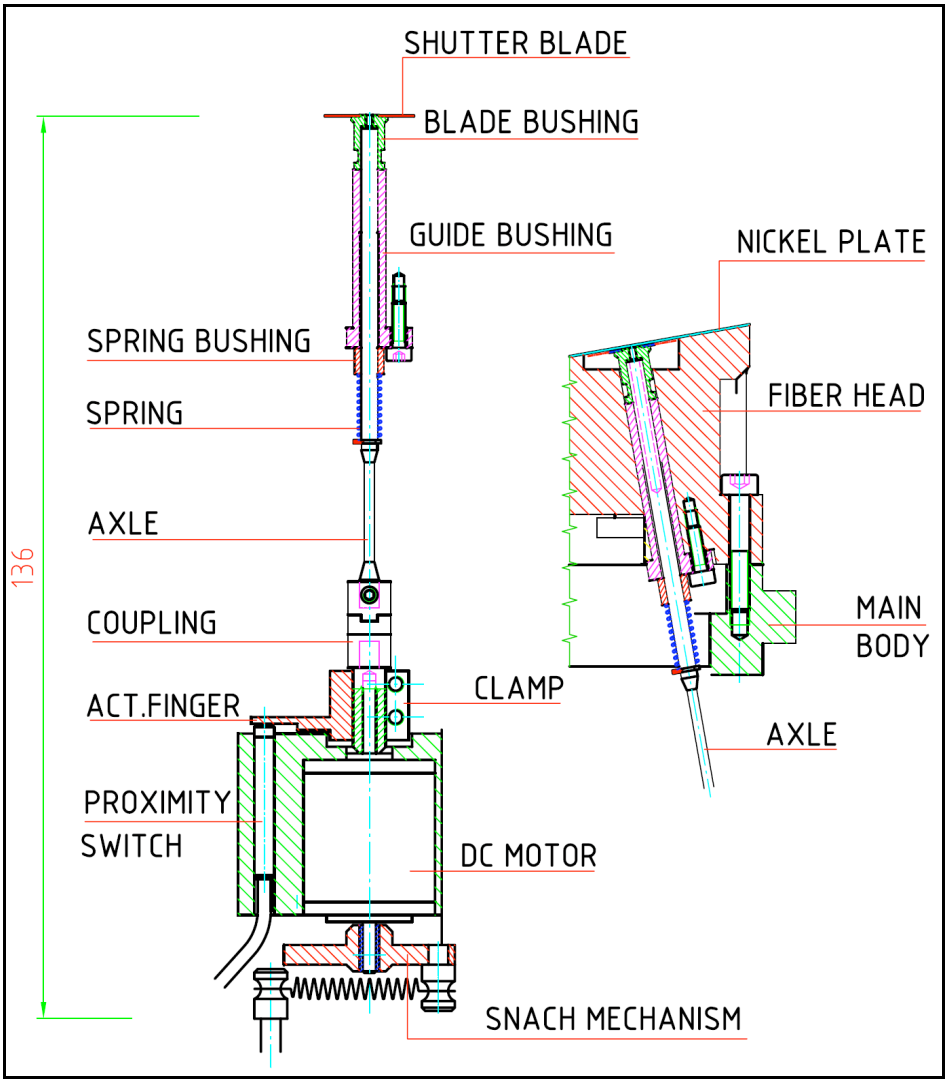


**Figure 5 : Shutter drive**

### 3.7. Ferrule and Rod Lens

The fibre termination or “ferrule” is basically a set of two aluminium pieces that both strain relief and hold the fibre precisely inside the head (part 2). Additionally it supports the glued rod lens over the polished fibre end (part 1). The two parts are hold together by loctite, gluing them with tight adjustment.

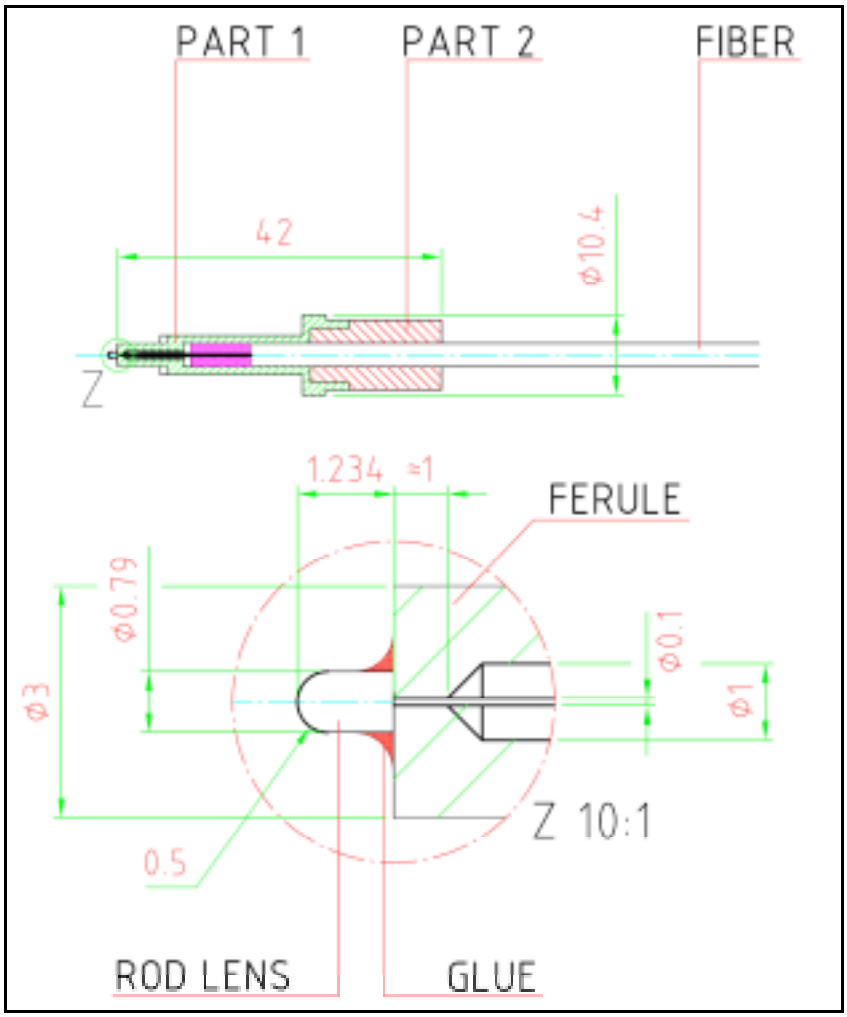


**Figure 6 : Ferrule and rod lens**

### 3.8. Fibre Head Assembly

The fibre head assembly is the finished block with; both ferrules adjusted on position and glued inside the head, the shutter mechanism mounted in place and the Nickel plate pinned on position.
The ferrule’s holes inside the head are larger in diameter allowing a +/-250µm adjusting range in the X Y direction when gluing the ferrule in place, additionally this gap accepts the necessary glue for a perfectly rigid bonding.

For the Z direction adjustment, tightly fitted threaded inserts inside the head are provided. The thread pitch is 0.35mm and +/-300µm adjusting range.
A coupling is used for the shutter drive-motor axle allowing easy mounting and dismounting of the fibre head assembly from the supporting main body. Please refer to Figure 7 below.

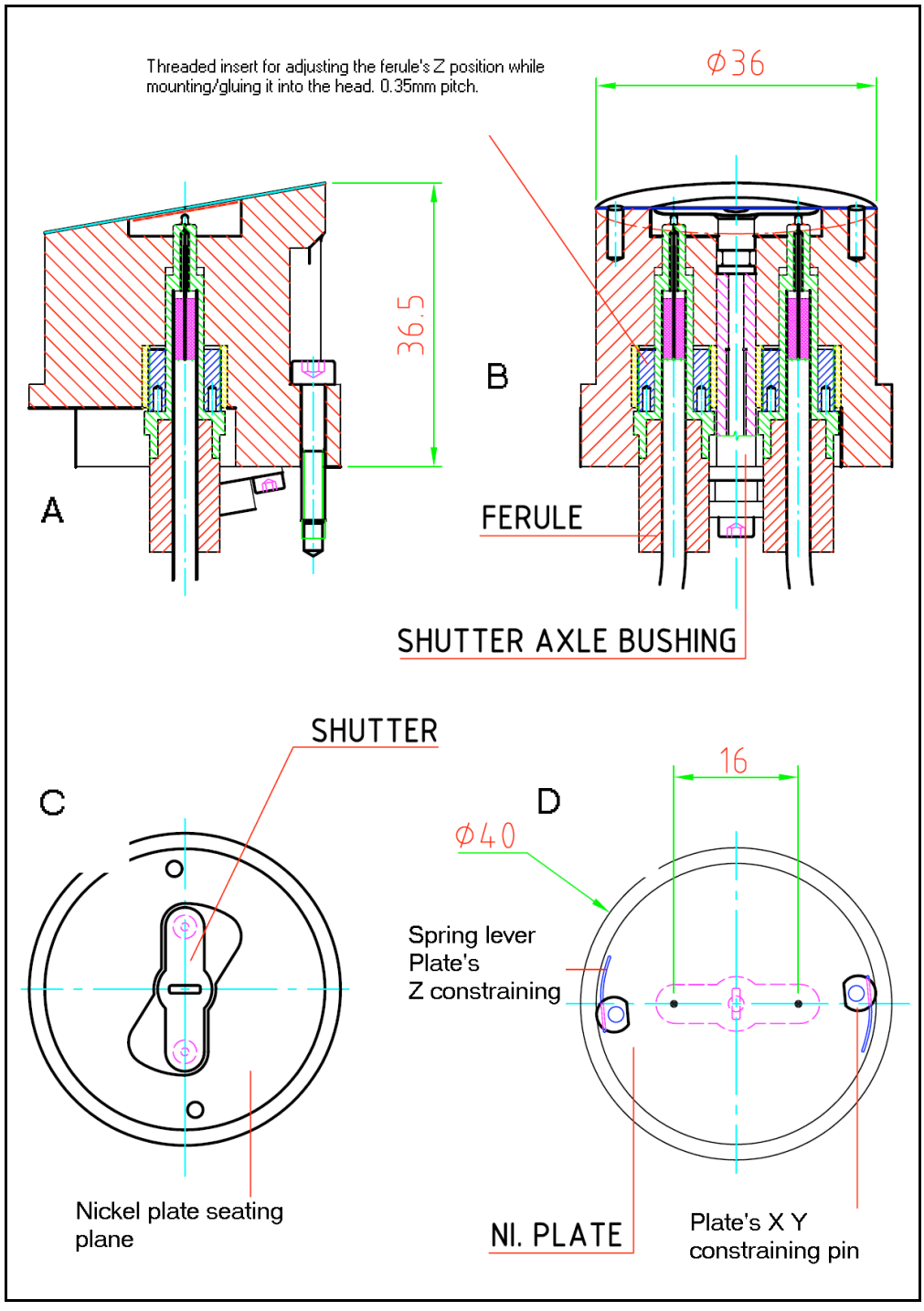


**Figure 7 : Fibre head Assembly**

# 4. MACHINING CONSIDERATIONS

## *4.1. Overview*

Due to the tightly specified tolerances for the fibre-head manufacturing a special approach was devised for machining the part. The basic idea is to machine all the tolerance critical holes without dismounting the piece.

## *4.2. Machining Precision*

The machine used, a MIKRON WF 21 D CNC, gives a positioning precision of ~2µm, basically the precision of the machine's linear encoders in a small range, 80mm travel.

We found the machine's spindle axis to be non-perpendicular to the table plane. Measuring 42arcsec on the X direction and 5arcsec on the Y direction. The X direction error could be reduced to ~5arcsec by adjustment. The Y direction is fixed and determined by the machine's construction quality.

## *4.3. Head Machining Exercise*

We start with a solid aluminium cylindrical block as shown in Figure 8, the block has two parts, the main block that will be the future head and a sort of "cup" that mates perfectly with the main block and is guided with steel pins on position and fastened by the aid of three M3 screws. The cup and the main block mating surfaces have the 10 degree angle required by the final head's front face.

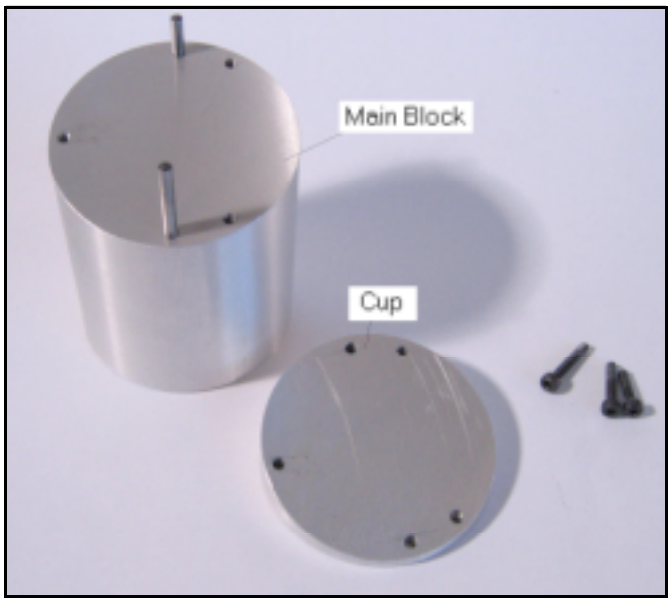


**Figure 8: Aluminium Block with the "Cup" Removed**

The idea is to place the reflective Ni plate that at the end will be the fibre head's aperture-mirror plate in between these two parts as shown in Figure 9 just before closing the "sandwich" (in Figure 9 please ignore the plate's centre hole and scratches). After closing, as shown in Figure 10, the block is ready for machining.

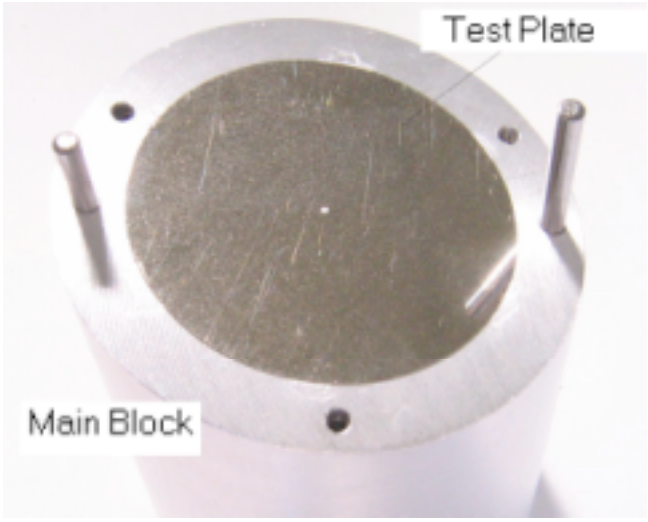


**Figure 9: Main Block with the Nickel Plate in Place**



**Figure 10: Closed Block Ready for Machining**

Now the block can be precisely and firmly hold in the milling machine table by the aid of a collet holding device. At this point and without dismounting the piece, all the tolerance critical machining steps are performed, this includes:

1. Drill two 2mm diameter holes, parallel to the block's main axis, for inserting pins for both holding the aperture plate on position and allowing the plate to be mounted and dismounted with high positioning accuracy. In fact the pins will be hand selected for allowing a play of 2µm, just enough play for inserting and removing them easily.
2. Drill two 200µm diameter aperture holes parallel to the block's main axis. These holes are drilled trough the cup starting first with a 3mm diameter tool, just enough deepness not to touch the Ni plate lying in between the cup and the block, Figure 11 below. Finally the 200µm holes are drilled. The maximum drilling depth for the small holes is 900µm, enough to pass trough the cup and the Nickel plate, leaving a ~300µm depth hole at the block.

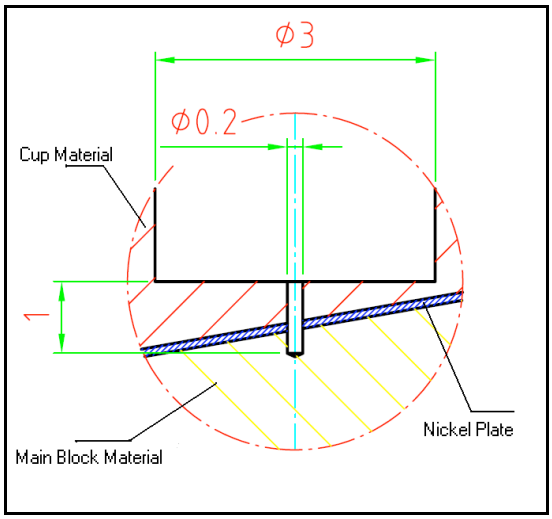


**Figure 11: Drilling of the aperture holes**

Due to the fact that these tiny holes are cut across the plate tightly "sandwiched" between two aluminium surfaces render very clean results. In fact inspecting our test plate we found the hole's interface two be perfectly clean outside a <5µm annulus around the hole and the hole shape looks almost perfectly round.

For our prototype we mounted the 200µm drill-bit on a collet and prior to the operation the drill-bit was centred to better than 1µm. The drilling was done in steps of 50µm at 10µm/sec feeding speed using 4000RPM. Although for these tiny drill-bits 4000RPM is quite low speed the use of a multiplier was not possible because an inevitable 15µm eccentricity was introduced by it.

3. After step 2 the Nickel plate is removed and the cup mounted back. Now two 2.9mm diameter holes are drilled all the way though the block and exactly

concentric to the 200µm holes on the block's inclined surface. Finally these holes are finished to 3mm diameter by the aid of a reamer.

At this point the cup is removed and the cavity for the shutter blade is milled. Now the cylinder is removed from the machine, but all the tolerance critical machining steps are finished.

This method has the additional advantage that the aperture holes are drilled with the required 10 degree inclination respect to the plate's surface. Thus avoiding any light looses due to the resultant inclined edges when the aperture holes are drilled normal to the plate's surface.

All the machining is done using a program that approaches the machining position of the holes from the same side, thus avoiding possible backlash errors. Additionally all the machining is done near the end of travel of the X, Y and Z axes. At these extremes the machine's ball-screws and sliding races are almost brand new.

# 5. FIBRE SPLICING

## 5.1. Overview

The Harps HEF head requires careful alignment of the fibre, the mini-lens and the aperture plate in the input head. The most reliable and easy way to perform this alignment is to illuminate the fibres from the output end with a high power source. This technique can not be applied on the Harps fibres since the output end is already mounted in the spectrograph and the vacuum vessel can not be opened. We decided to cut temporally the fibres do the adjustments and patch them back. Of course this is not as easy as it sounds. For the complete information on the operation please refer to [AP3] "Fibre splicing test".

## 5.2. Tool

The fibre splicing tool is a single brass piece with three steel pins as shown in Figure 12 #1. You need one unit for each splicing, in simple words this brass piece and the steel pins becomes at the end of the splicing process a sort of "custom made ***Super*** fibre-connector". For the complete information on the operation please refer to [AP3] "Fibre splicing test" and to Figure 12 below. Please note that in Figure 12 the word "ferrule" refers to small ceramic tube of about 8mm long, 2.5mm outer diameter and 100µm inner diameter, different meaning as on the present document.

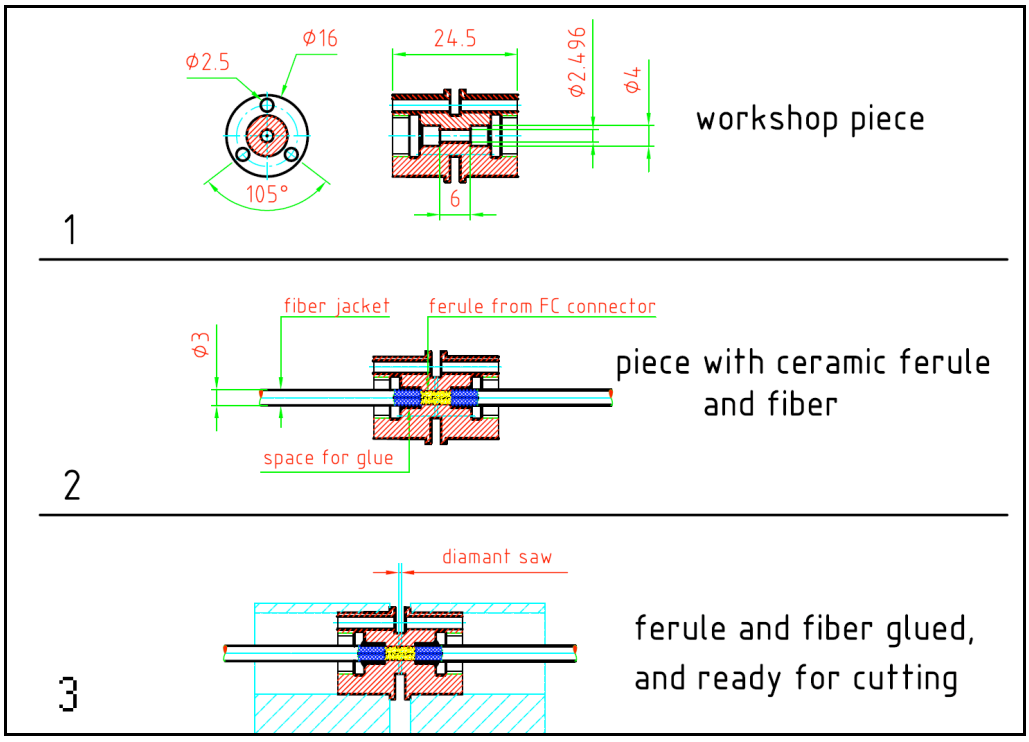


**Figure 12 : Fibre splicing tool**

### 5.3. Procedure

The splicing procedure is described on [AP3] “Fibre splicing test”.

## 6. FIBRE HEAD ALIGNMENT

### 6.1. Overview

The complete alignment procedure involves two different and independent operations:

I. Perfect centring of the rod lens and the fibre end at the ferrule, and gluing it exactly on this position. See Figure 6.

II. Perfect X, Y centring and Z positioning of the finished ferrule inside the head and gluing it exactly on this location. See Figure 7 A and B.

Each operation requires a specially designed tool. These tools are described in the following paragraphs.

### 6.2. Tool #1

By the aid of Tool #1 the rod lens can be glued perfectly centred to the fibre end at the ferrule

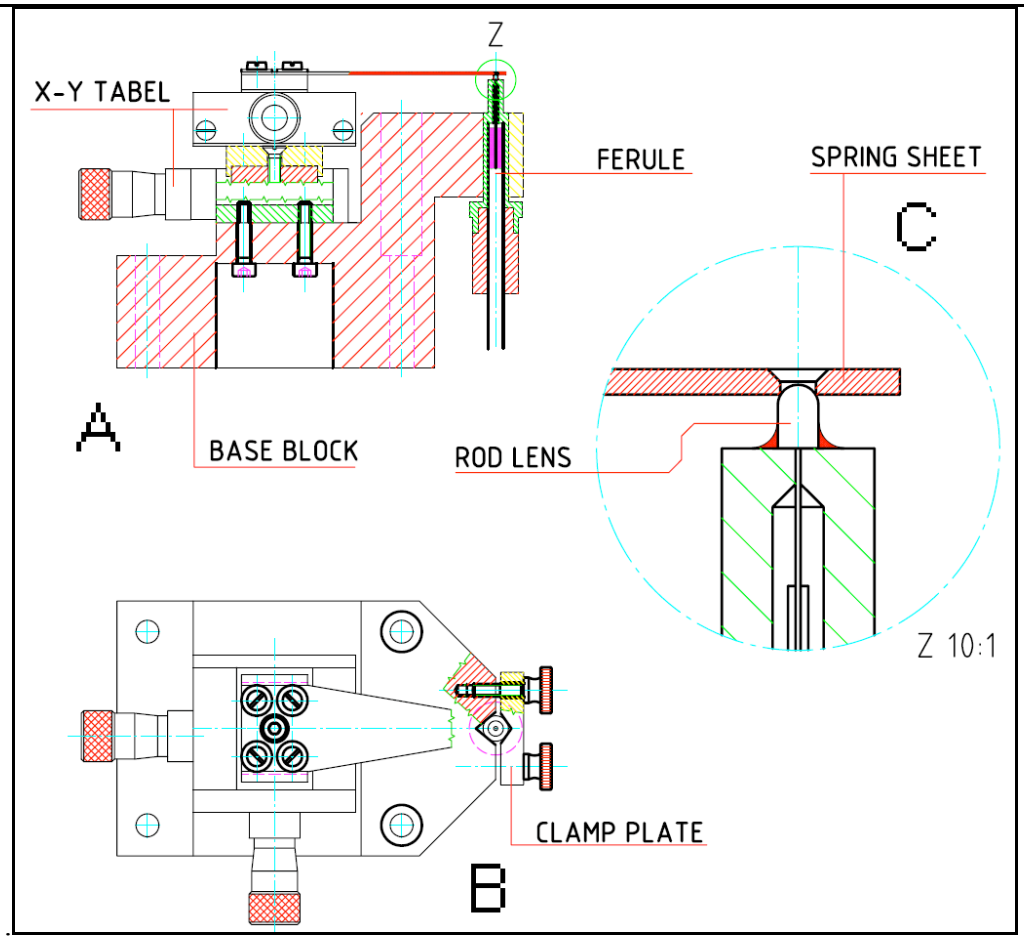


**Figure 13 : Tool #1**

Tool #1 is an aluminium base block with two stacked small linear stages driven by micro-meter screws Figure 13 A and B above. Both linear axes are mounted opposed at 90 degrees. Over the top of the stack a 0.3mm thickness arm, made of spring steel, is mounted. The arm protrudes straight out up to the border of the base block having at this position a 0.7mm diameter hole. The ferrule is clamped at the side of the block with the fibre end plane just below the arm's hole. The rod lens is snapped in between the hole and the ferrule's fibre end plane Figure 13 C. Now the rod lens position over the plane can be changed by turning the micro-meter screws.

### *6.3. Tool #2*

Once the ferrules are finished, completed with rod lenses, they are glued into the fibre head itself by the aid of tool #2.

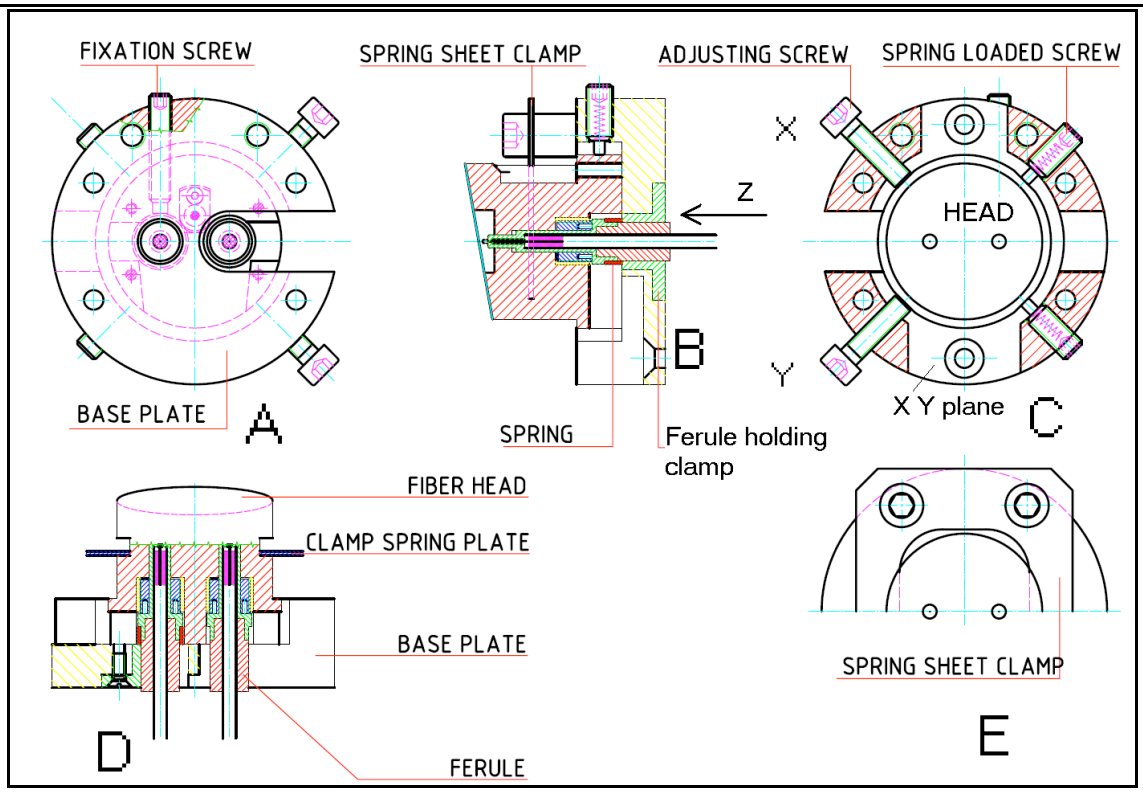


**Figure 14 : Tool #2**

The head is mounted over a round brass base plate and constrained with adjustable X and Y screws Figure 14 C. Additionally a spring sheet clamp keeps the head perfectly seated over the X Y plane but allowing X Y displacements Figure 14 E.
The base plate has a slot and a hole as shown in Figure 14 A bottom view. The slot allows seating the head over the X Y plane with one ferrule already glued in place. The hole allows the insertion of the ferrule to be glued inside the head and then fix it "perfectly" perpendicular to the X Y plane of the base plate, the insertion deepness is determined by the threaded inserts inside the head. Since the ferrule's hole inside the head allows a +/-250µm X Y displacement the head can be displaced accordingly in this range by moving the X and Y screws shown in Figure 14 C.

### *6.4. Alignment Procedure using Tool #1*

Place Tool #1 inside a temperature controlled room for several hours prior to the operation, later perform the complete operation at the same temperature.
Mount the polished ferrule over Tool #1 and prepare a green laser for illuminating the fibre from the "Super fibre-connector" side.

Apply optical cement to the ferrule plane and with the aid of a tweezers snap the rod lens in. Turn on the laser and by watching the pupil projection adjust the micro-meter

screws. Leave the setup untouched until the glue is fully cured. Perhaps it would be desirable to inspect the pupil projection during the first hours of the curing process.

### *6.5. Alignment Procedure using Tool #2*

Place Tool #2 inside a temperature controlled room for several hours prior to the operation, later perform the complete operation at the same temperature.

By turning adjust the threaded inserts inside the head for the nominal 770µm Z position of the ferrule. Insert the ferrule by hand and watch the pupil projection, if necessary, readjust the position by turning the threaded inserts until OK.

Place the head over Tool #2 base plate, centre it and clamp it with the spring sheet. Apply a uniform layer of glue to the ferrule's area that penetrates into the head, except the rod lens zone, now from underneath and trough the base plate hole insert the ferrule until it positively stops against the threaded insert inside the head, move and twist the ferrule inside the head to assure an even distribution of glue in the interface, this is important for obtaining a rigid and stable bonding. Insert the pressure spring to keep the ferrule positively in contact and well seated over the threaded insert while locking it to the base block. Insert the slotted clamp and lock the ferrule to the base block.

Turn on the laser and by watching the pupil projection adjust the X Y screws. Leave the setup untouched until the glue is fully cured. Perhaps it would be desirable to inspect the pupil projection during the first hours of the curing process.

## 7. ROD LENS DESIGN.

The focal reducer to convert the F/8 3.6 m telescope beam into an F/4 beam in the fibre is a rod lens with the following characteristics:

| | |
|---|---|
| Glass | LAKN 22 |
| Rod diameter | 0.8 ± 0.05 mm |
| Radius of the spherical surface | 0.5 ± 0.05 mm |
| Length | 1.27 ± 0.05 mm |
| Coating | None |
| Focal length | 0.77 ± 0.005 mm |

The length of the rod is such that the image focal plane lies on the flat surface.

Figure 15 shows the Zemax optical design. The input focal beam is F/8 and the equivalent star on the lens focal plane is 1.4 arcsec (200 µm diameter). This star is placed on the object focal plane of the lens and the fibre input end is glued to the flat surface of the lens.

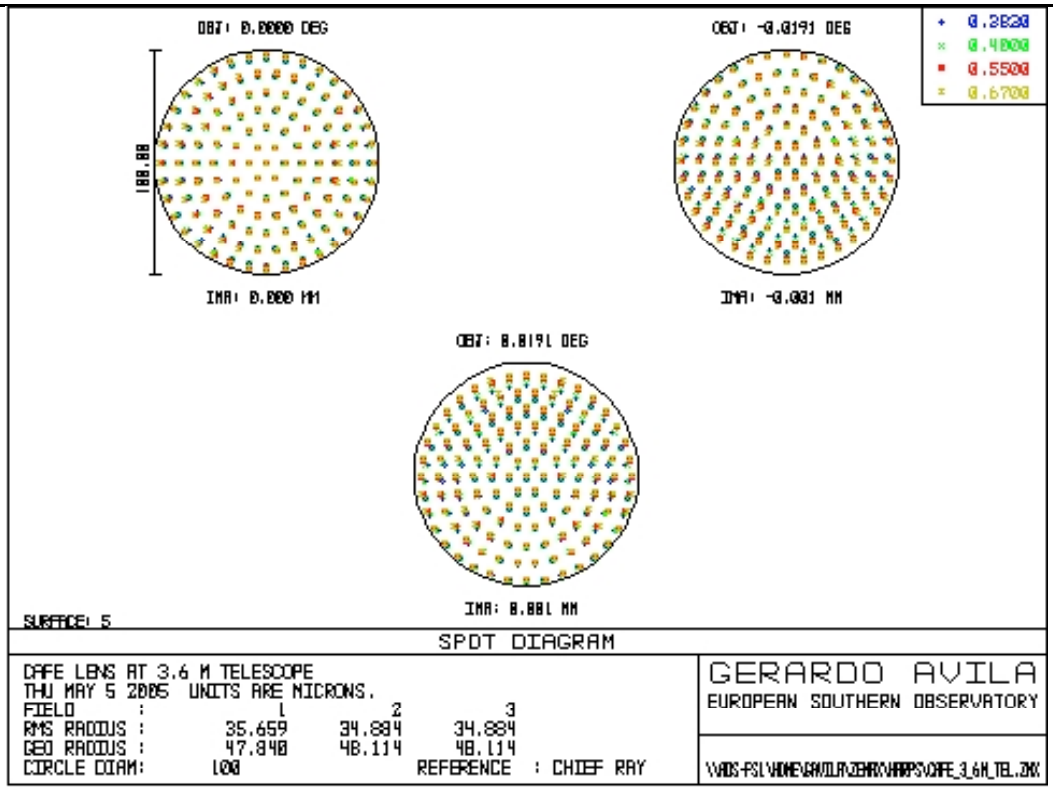


**Figure 15: Zemax optical design of the EGGS rod lens**

The spot diagram at the lens focal plane as shown in Figure 16 gives an indirect idea of the image quality of the pupil of the telescope on the fibre input end.

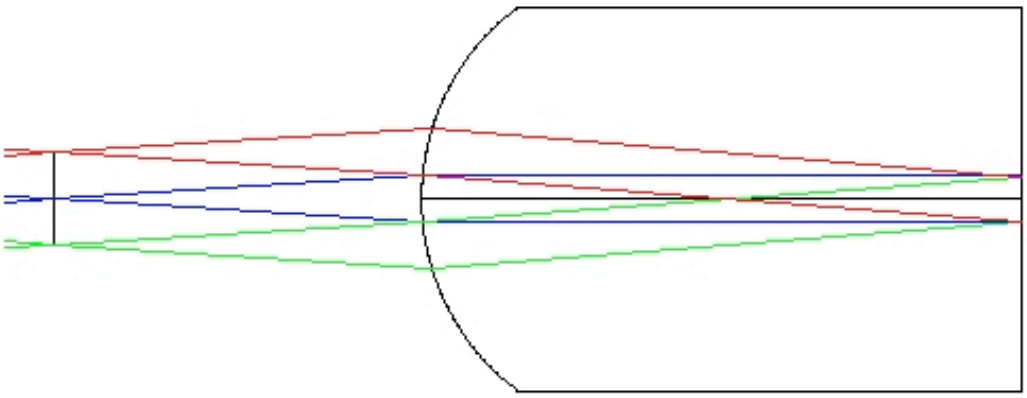

**Figure 16: Spot diagram on the image focal plane of the rod lens.**

The circle (seen in profile on the left part of Figure 16) is 100 µm in diameter, which corresponds to the diameter of the fibre.

All the rays pass inside the fibre core (100 µm diameter). Therefore no vignetting is expected by coupling the image of the telescope to the fibre end.